TEAR SHEET

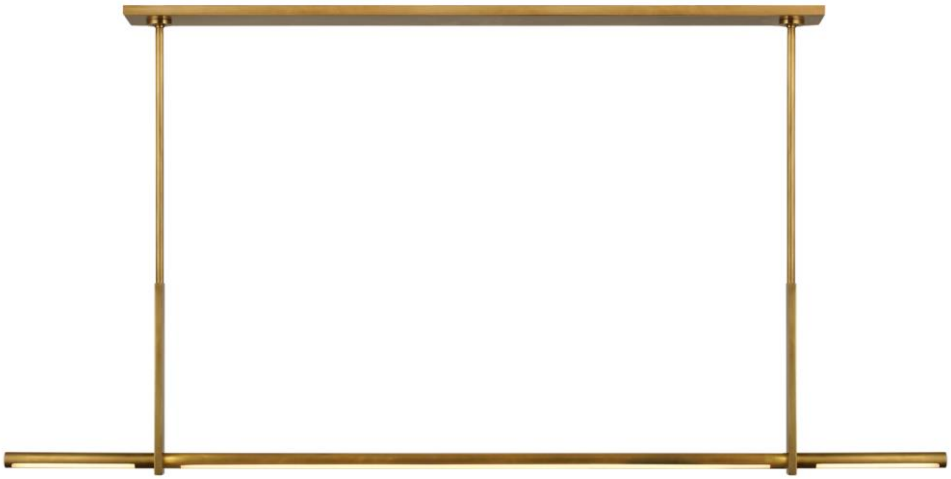

Axis Large Linear Pendant

Item # KW 5730AB

Designer: Kelly Wearstler

O/A Height: 46.25"
Fixture Height: 12"
Min. Custom Height: 18.25"
Width: 59.5" x 1.75"
Canopy: 4.5" x 44.25" Rectangle
Finishes: AB, BZ, PN
Socket: Dedicated LED
Wattage: 40w (3200lm)
Weight: 20 Pounds
Note: UL Only | Custom Height Available

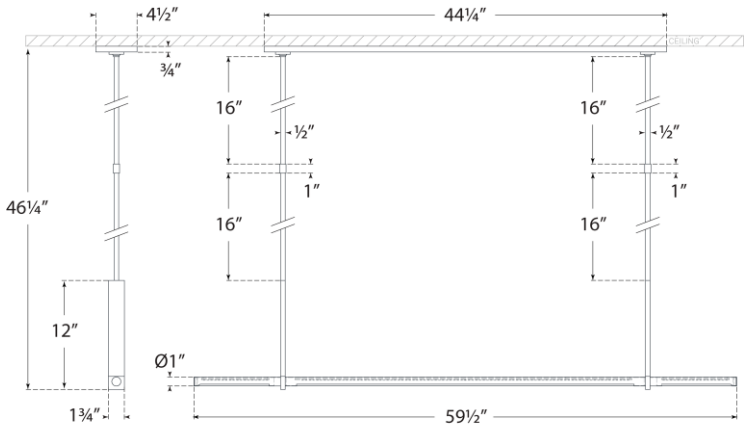

VISUAL COMFORT